DIMENSIONS							UNIT: mm
NOMINAL DIAMETER	ød	L	FLANGE		H	B	W
			øC	n–h			
40(1.5”)	40	33	95	4–M12	155	205	27
50(2”)	50	43	105	4–M12	158	205	28
65(2.5’)	67	46	130	4–M12	169	205	51
80(3”)	79	46	145	4–M16	180	205	67
100(4”)	101	52	165	8–M16	194	265	89
125(5”)	124	56	200	8–M16	207	265	113
150(6”)	147	56	230	8–M16	220	265	139
200(8”)	197	60	280	8–M20	275	350	191
FLANGE RATING : JIS 5K							

P.NO.	PART NAME	MATERIAL	Q’TY	REMARK
1	BODY	FC200	1	
2	DISC	A351CF8	1	
3	SEAT RING	NBR	1	
4	MAIN STEM	SUS410	1	
5	STUB STEM	SUS410	1	
6	PACKING	NBR	1	
7	O–RING	NBR	1	
8	GLAND	ACETAL	1	
9	O–RING	NBR	1	
10	STOP BOLT	SS400	1	
11	BOLT/O-RING/BOLT	SS400/NBR/SUS304	1SET	
12	INDICATOR	SS400	1	GALVANIZED
13	LEVER	ASS’Y	1	

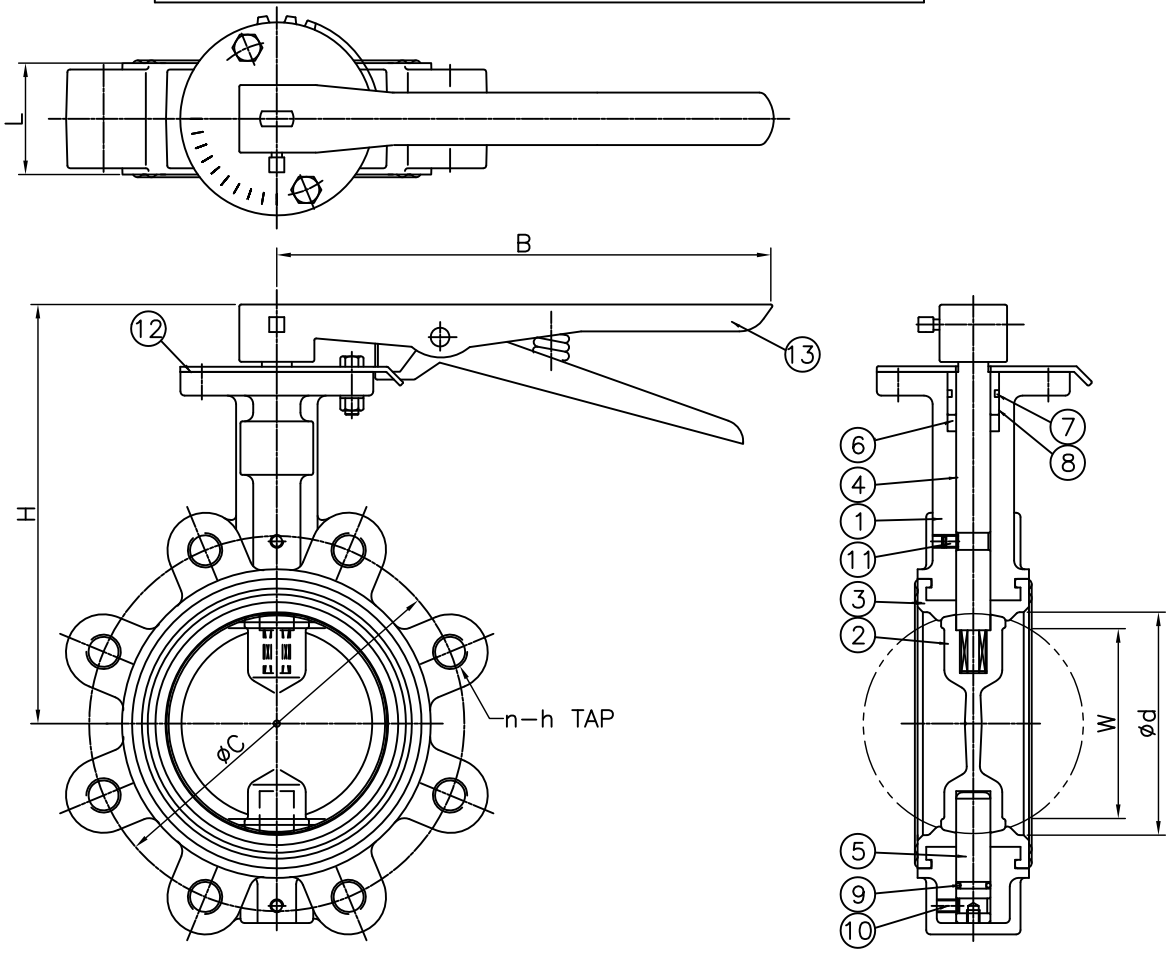

NOTES

1. ”W” DIMENSION IS THE MINIMUM ALLOWABLE FLANGE INSIDE DIAMETER OR PIPE INSIDE DIAMETER AT THE CENTERED BODY FACE WHEN IN THE OPEN POSITION
2. HYDROSTATIC TEST
   –BODY : 15 BAR
   –SEAT : 11 BAR
3. FACE TO FACE : ISO 5752

NO.	DATE	DESCRIPTION	DRA.	DES.	CHK.	APP.
0	’06.02.10	FIRST ISSUE				

TITLE	JIS 5K LUGGED TYPE LEVER OPERATED BUTTERFLY VALVE				
APP.	CHK.	DES.	DRA.	SCALE	N/S
				DATE	’06.01.12
				DWG/N	CBV–L–L3

JAEYOU INDUSTRY CO.,LTD